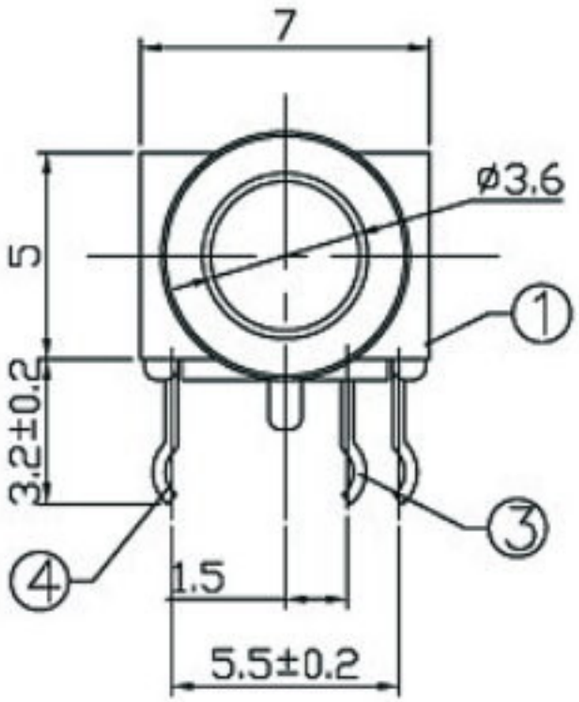

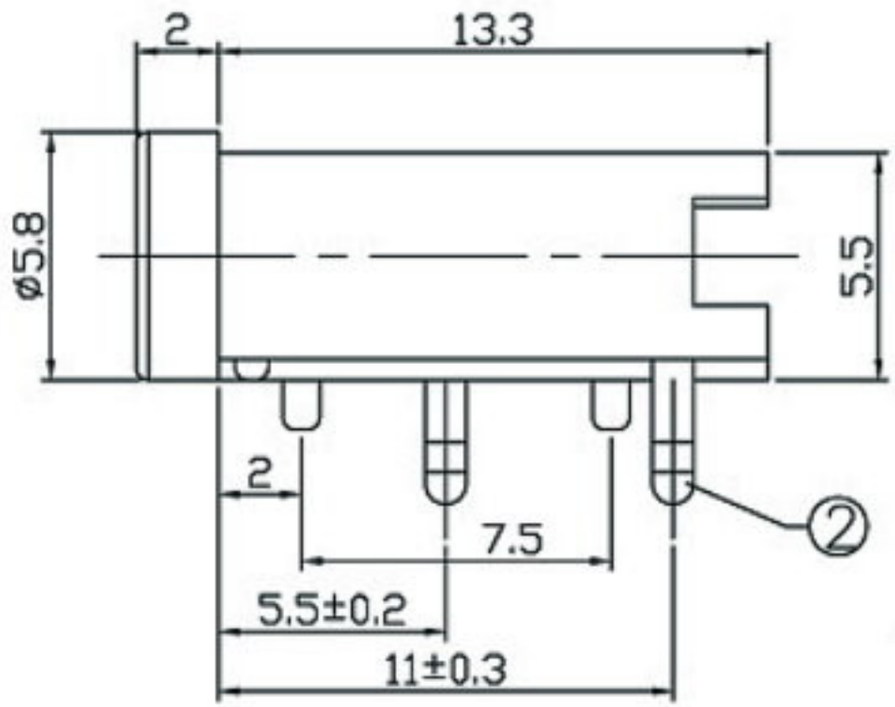

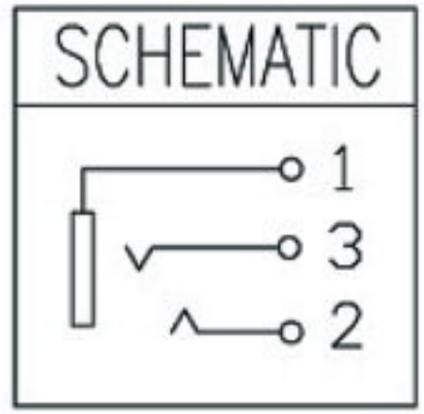

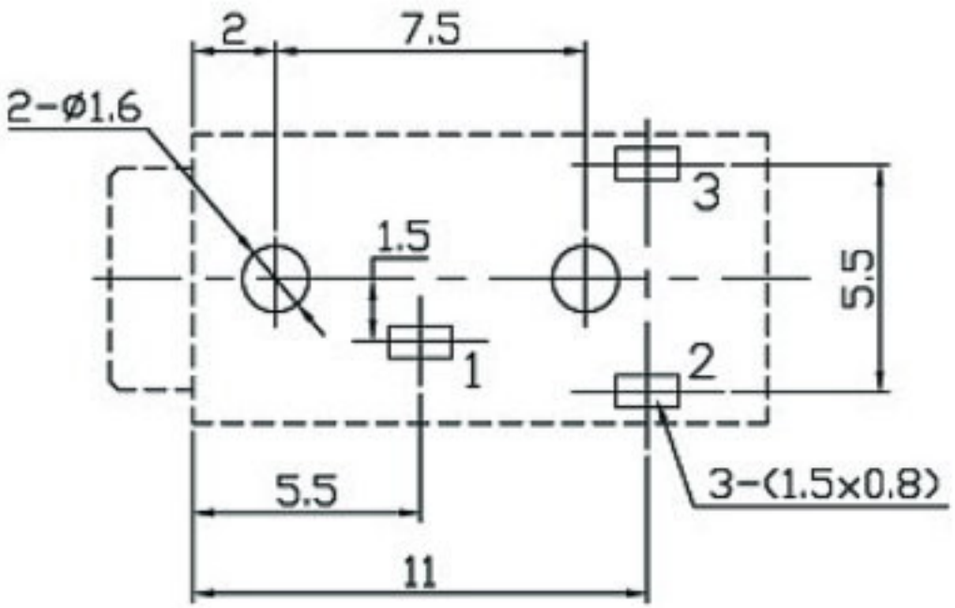

T:1.6 Dimensions of PC board holes

Tolerance : ±0.1(Printed-top view)

UNLESS OTHERWISE SPECIFIED, TOLERANCE ON DECIMAL: ±0.3

LEAD FREE

LTR	PART NAME	QTY	MATERIAL		REMARK
4	3# CONTACT FOOT	1	C5191	t=0.25	MB:Cu Ag PLATED
3	2# CONTACT FOOT	1	C5191	t=0.25	MB:Cu Ag PLATED
2	1# CONTACT FOOT	1	C5191	t=0.25	MB:Cu Ag PLATED
1	HOUSING	1	PBT 4815		UL-94V0

UNIT	mm			Seconn International Enterprise Co., Ltd.			
TOLERANCES				TITLE			
				MINIATURE Jack			
				PART NO.	JAKH-S035-27SD11		
DRAWN		DATE					
SCALE		SIZE	A4	SHEET	1/1	REV	